INDEX PAGE

A、本體機構 ---------- ARM BED AND IT' S ACCESSORIES ---------- 2－3
B、縫綫壓力調整機構 ------ UPPER THREAD TENSION REGULATOR MECHANISM ----- 4－5
C、上軸機構 ---------- UPPER SHAFT MECHANISM ---------- 6－7
D、針棒、天秤機構 -------- NEEDLE BAR AND TAKE-UP LEVER MECHANISM ---------- 8－11
E、針搖擺機構 ---------- NEEDLE ROCKING MECHANISM ---------- 12－15
F、親針與凸輪機構 ---------- MAIN NEEDLE & CAM MECHANISM ---------- 16－19
G、押棒機構 ---------- PRESSER FOOT MECHANISM ---------- 20－23
H、送料機構 ---------- FEED MECHANISM ---------- 24－27
I、下軸、釜軸機構 ---------- LOWER SHAFT AND ROTARY HOOK MECHANISM --------- 28－31
J、附件 ---------- ACCESSORIES ---------- 32－33
K、零件號碼與頁數封照 ---- NUMERICAL PARTS－LIST ---------- 34－37

D、1721 針棒、天秤機構 NEEDLE BAR AND TAKE-UP LEVER MECHANISM

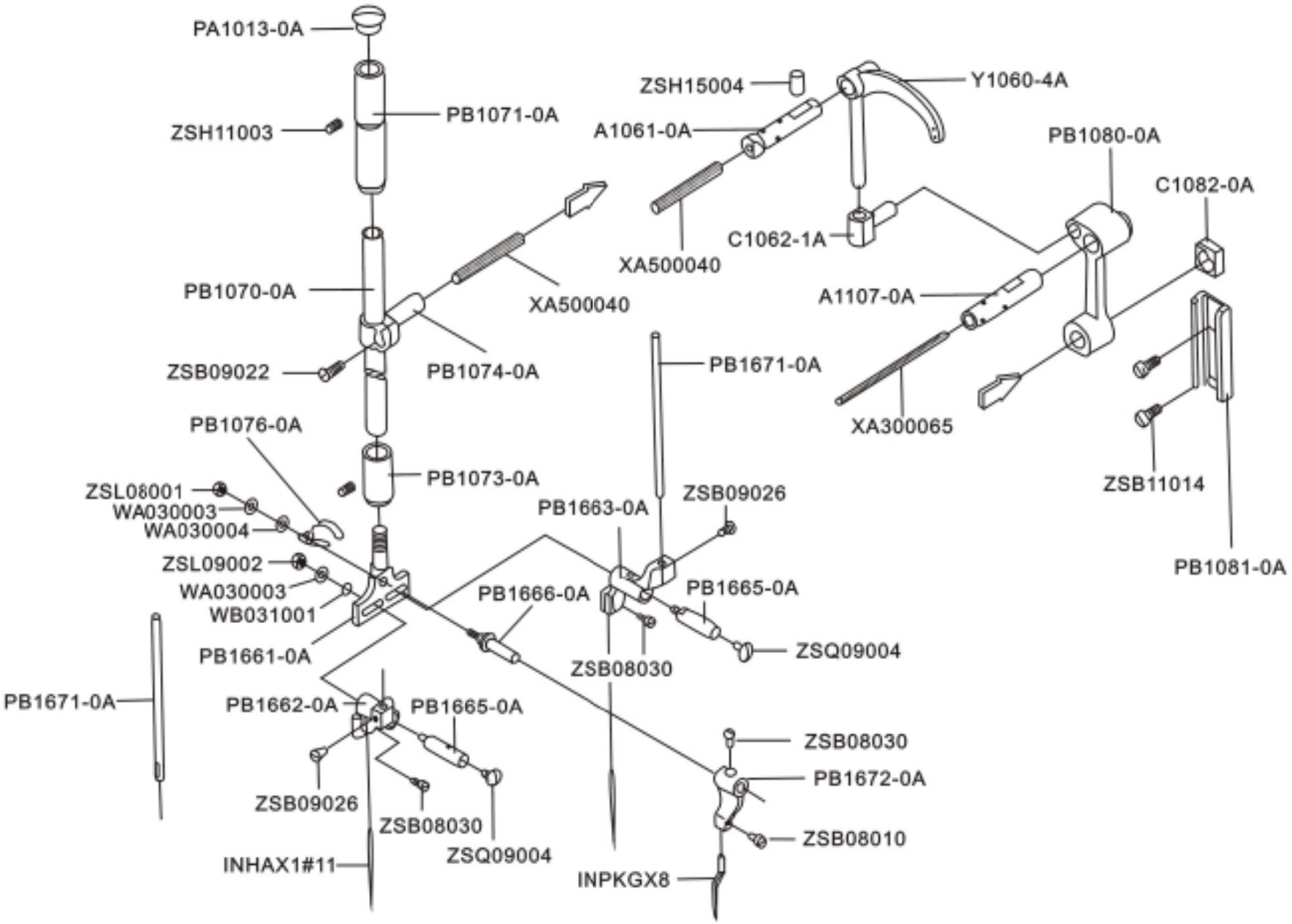

D、1721 針棒、天秤機構 NEEDLE BAR AND TAKE-UP LEVER MECHANISM

零件號碼 Part No	零件名稱	Name Of Part	件數 Q, TY	備注 Remarks
WA030003	平墊圈	Washer	3	
WA030004	平墊圈	Washer	1	
WB031001	彈簧墊圈	Spring washer	2	
XA300065	油綫	Oil wick	1	
XA500040	油綫	Oil wick	2	
ZSB08010	螺絲	Screw(1/8-44×4.6)	1	
ZSB08030	螺絲	Screw(1/8-44×5.6)	3	
ZSB09022	螺絲	Screw(9/64-40×8)	1	
ZSB09026	螺絲	Screw(9/64-40×5)	2	
ZSB11014	螺絲	Screw(11/64-40×8.5)	2	
ZSH11003	螺絲	Screw(11/64-40×8.5)	2	
ZSH15004	螺絲	Screw(15/64-28×20)	1	
ZSL08001	螺母	Nut(1/8-44×2)	1	
ZSL09002	螺母	Nut(9/64-40×2.5)	2	
ZSQ09004	螺絲	Screw(9/64-40×6)	2	

E、1721 針搖擺機構 NEEDLE ROCKING MECHANISM(1/2)

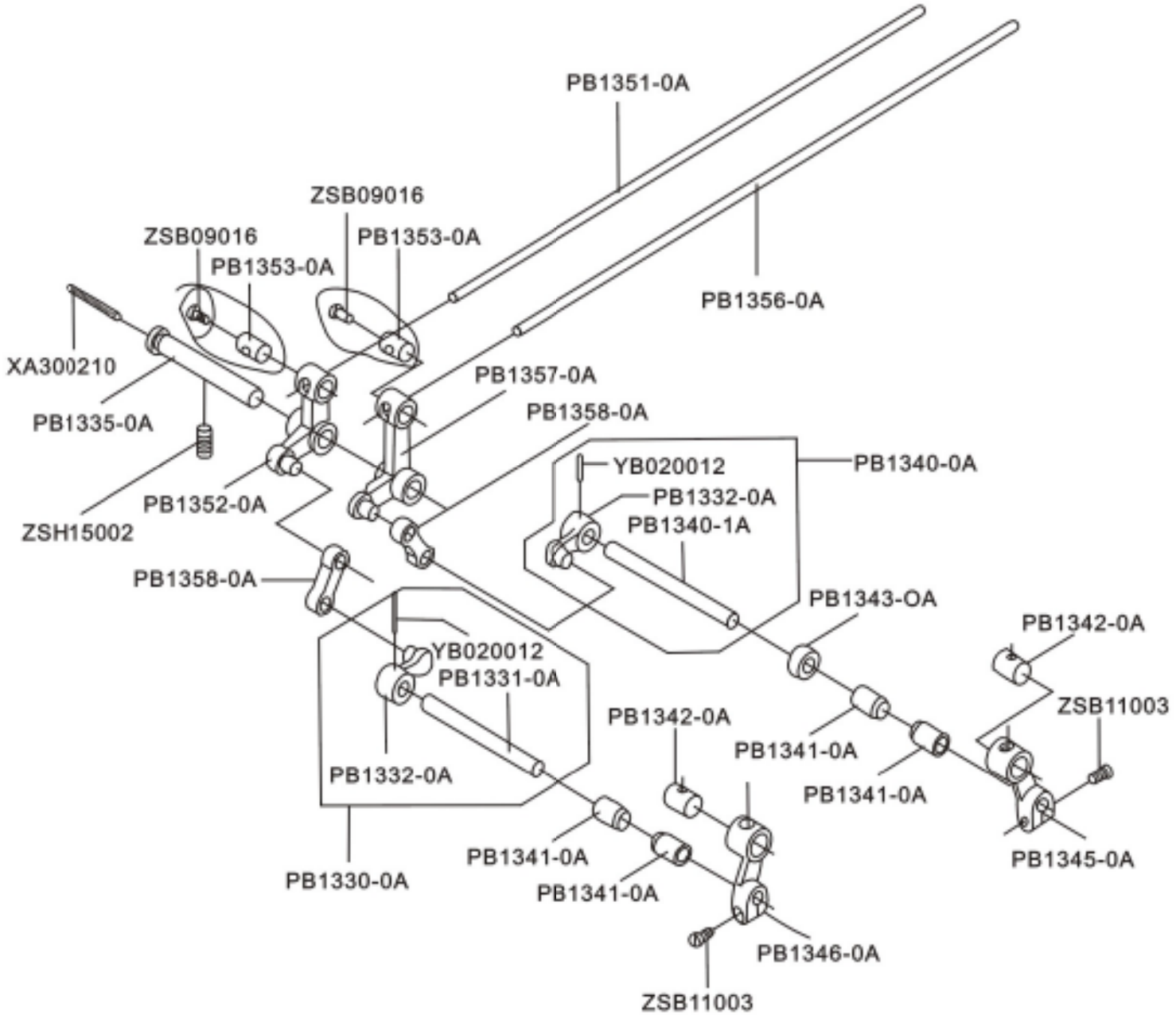

E、1721 針搖擺機構 NEEDLE ROCKING MECHANISM (1/2)

零件號碼 Part No	零件名稱	Name Of Part	件數 Q, TY	備注 Remarks
PB1330-0A	針搖動腕組(左)	Needle vibrating arm set(left)	1	
PB1331-0A	針搖動軸(左)	Needle vibrating shaft	1	
PB1332-0A	針搖動腕	Needle vibrating arm	2	
PB1335-0A	搖動支軸	Bell crank shaft	1	
PB1340-0A	針搖動腕組(右)	Needle vibrating arm set (right)	1	
PB1340-1A	針搖動軸(右)	Needle vibrating shaft	1	
PB1341-0A	針搖動軸套管	Needle vibrating shaft hushing	4	
PB1342-0A	縱定位棒鉗	Vibrating bushing	2	
PB1343-OA	針搖動軸墊圈	Spaccr	1	
PB1345-0A	針搖動腕(前右)	Needle vimrating arm (fornt right)	1	
PB1346-0A	針搖動腕(前左)	Needle vibrating arm (front left)	1	
PB1351-0A	橫棒(短)	Flank rod(short)	1	
PB1352-0A	搖動連杆(小)	Bell crank (small)	1	
PB1353-0A	橫棒鉗	Flank rod bushing	2	
PB1356-0A	橫棒(長)	Flank rod (long)	1	
PB1357-0A	搖動連杆(大)	Bell crank (large)	1	
PB1358-0A	搖動連結板	Vibrating conncting link	2	
XA300210	油綫	Oil wick	1	
YB020012	推拔銷	Taper pin	2	
ZSB09016	螺絲	Screw(9/64-40×6)	2	
ZSB11003	螺絲	Screw(11/64-40×9)	2	
ZSH15002	螺絲	Screw(15/64-28×8)	1	

E、1721 針搖擺機構 NEEDLE ROCKING MECHANISM (2/2)

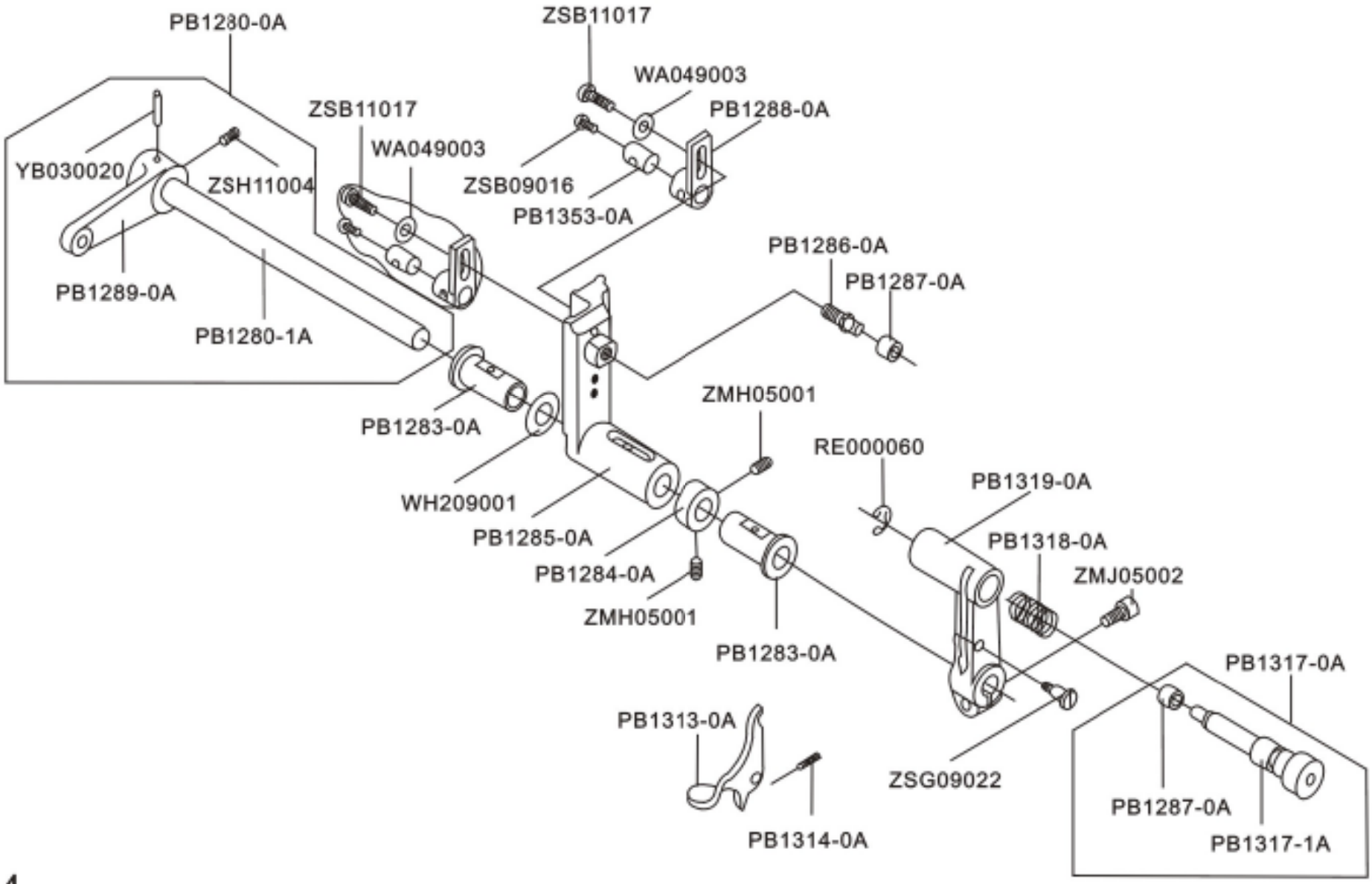

E、1721 針搖擺機構 NEEDLE ROCKING MECHANISM (2/2)

零件號碼 Part No	零件名稱	Name Of Part	件數 Q, TY	備注 Remarks
PB1280-0A	押棒作動腕組	Presser moving arm set	1	
PB1280-1A	押棒作動軸	Presser moving shaft	1	
PB1283-0A	針搖動支軸套管	Needle vibrating lever shaft bushing	2	
PB1284-0A	定環	Collar	1	
PB1285-0A	針搖動座	Needle vibrating lever	1	
PB1286-0A	支軸	Needle vibrating lever roller shaft	1	
PB1287-0A	滾輪	Roller	2	
PB1288-0A	搖動板	Slider	2	
PB1289-0A	親針作動腕	Presser movig arm	1	
PB1313-0A	押棒作動腕	Presser activating lever	1	
PB1314-0A	彈簧	Spring	1	
PB1317-0A	滾輪軸組	Lever base roller shaft set	1	
PB1317-1A	滾輪軸組	Lever base roller shaft	1	
PB1318-0A	彈簧	spring	1	
PB1319-0A	押工作動臺	Presser activating lever base	1	
PB1353-0A	橫棒鉗	Flank rod hushing	2	
RE000060	E形扣環	E-ring	1	
WA049003	平墊圈	Washer	2	
WH209001	平墊圈	Washer	1	
YB030020	推拔銷	Taper pin	1	
ZMH05001	螺絲	Screw(M5×0.8×5)	2	
ZMJ05002	螺絲	Screw(M5×0.8×12)	1	
ZSB09016	螺絲	Screw(9/64-40×6)	2	
ZSB11017	螺絲	Screw(11/64-40×12)	2	
ZSG09022	螺絲	Screw(9/64-40×5)	1	
ZSH11004	螺絲	Screw(11/64-40×5)	1	

F、1721 親針與凸輪機構 MAIN NEEDLE &CAM MECHANISM

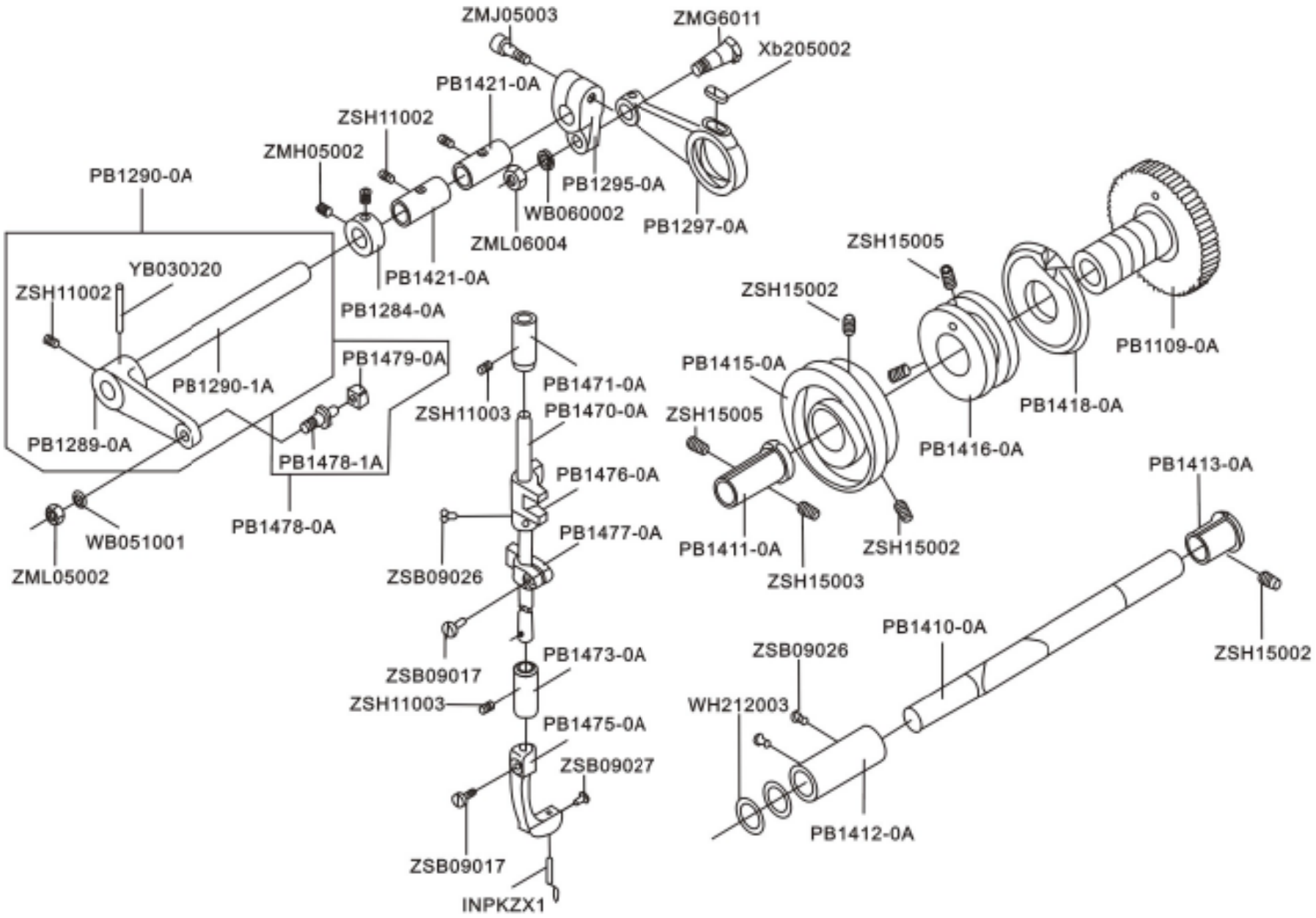

F、1721 親針與凸輪機構 MAIN NEEDLE &CAM MECHANISM

零件號碼 Part No	零件名稱	Name Of Part	件數 Q, TY	備注 Remarks
INPKZX1	親針	Main needle(auxi l iary piercer)	1	
PB1109-0A	送料齒輪	Feed lifting rock cam	1	
PB1284-0A	定環	Collar	1	
PB1289-0A	親針作動腕	Main needle activating arm	1	
PB1290-0A	親針作動腕組	Main needle avtivating arm set	1	
PB1290-1A	搖動軸	Feed rotating shaft	1	
PB1295-0A	親針搖動腕	Main needle cibrating crank	1	
PB1297-0A	搖動腕連接桿	Connection rod	1	
PB1410-0A	凸輪軸	Cam shaft	1	
PB1411-0A	凸輪軸套管(左)	Bushing(left)	1	
PB1412-0A	凸輪軸套管(中)	Bushing(middle)	1	
PB1413-0A	凸輪軸套管(右)	Bushing(right)	1	
PB1415-0A	水平送料凸輪	Feed rock cam	1	
PB1416-0A	針搖動傳動凸輪	Needle vibrating groovcd cam	1	
PB1418-0A	押工作動凸輪	Presser moving cam	1	
PB1421-0A	搖動軸套管	Bushing	2	
PB1470-0A	親針棒	Main needle bar	1	
PB1471-0A	親針棒套管(上)	Main needle bar bushing(upper)	1	
PB1473-0A	親針棒套管(下)	Main needle bar bushing(lower)	1	
PB1475-0A	親針針榴	Main needle clamp	1	
PB1476-0A	親針棒提升器	Main needle bar conneeting stud	1	
PB1477-0A	親針棒固定器	Nain needle bar guide	1	
PB1478-0A	滑塊組	Square block set	1	
PB1478-1A	滑塊支軸	Square block shaft	1	
PB1479-0A	滑塊	Square block	1	

F、1721 親針與凸輪機構 MAIN NEEDLE &CAM MECHANISM

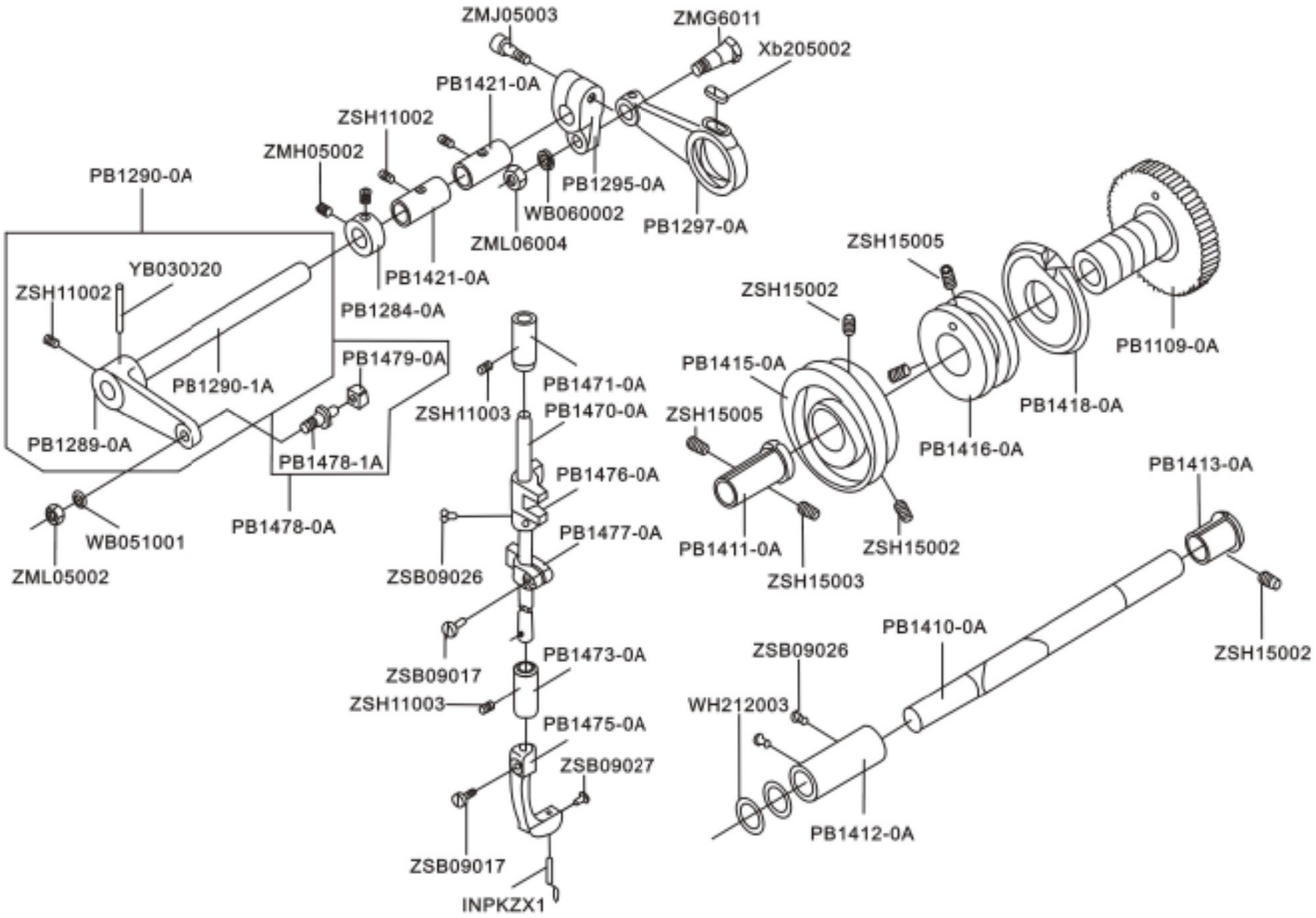

F、1721 親針與凸輪機構 MAIN NEEDLE &CAM MECHANISM

零件號碼 Part No	零件名稱	Name Of Part	件數 Q, TY	備注 Remarks
WB051001	彈簧墊圈	Spring washer	1	
WB060002	彈簧墊圈	Spring washer	1	
WH212003	平墊圈	Washer	2	
XB205002	油棉	Oil felt	1	
YB030020	推拔銷	Taper pin	1	
ZMG06011	螺絲	Screw(M6×1.0×6.5)	1	
ZMH05002	螺絲	Screw(M5×0.8×6)	2	
ZMJ05003	螺絲	Screw(M5×0.8×15)	1	
ZML05002	螺母	Nut(M5×0.8×4)	1	
ZML06004	螺母	Nut(M6×1.0×4.8)	1	
ZSB09017	螺絲	Screw(9/64-40×8)	2	
ZSB09026	螺絲	Screw(9/64-40×5)	3	
ZSB09027	螺絲	Screw(9/64-40×4)	1	
ZSH11002	螺絲	Screw(11/64-40×6)	3	
ZSH15002	螺絲	Screw(11/64-40×8.5)	2	
ZSH15002	螺絲	Screw(15/64-28×8)	3	
ZSH15003	螺絲	Screw(15/64-28×5)	1	
ZSH15005	螺絲	Screw(15/64-28×4)	3	

A、1721 本體機構 ARM BED AND IT`S ACCESSORIES

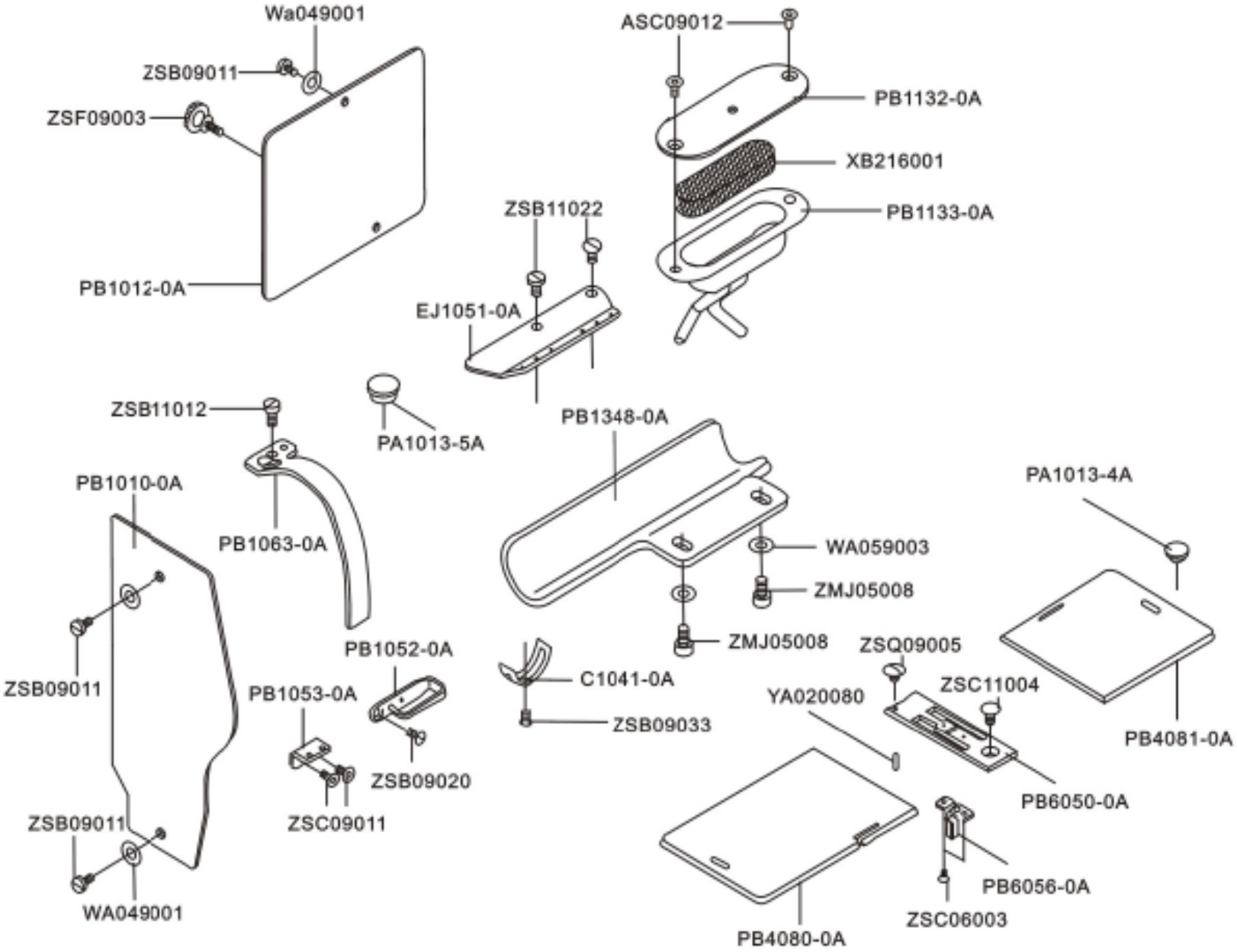

G、1721 押棒機構 PRESSER FOOT BAT MECHANISM

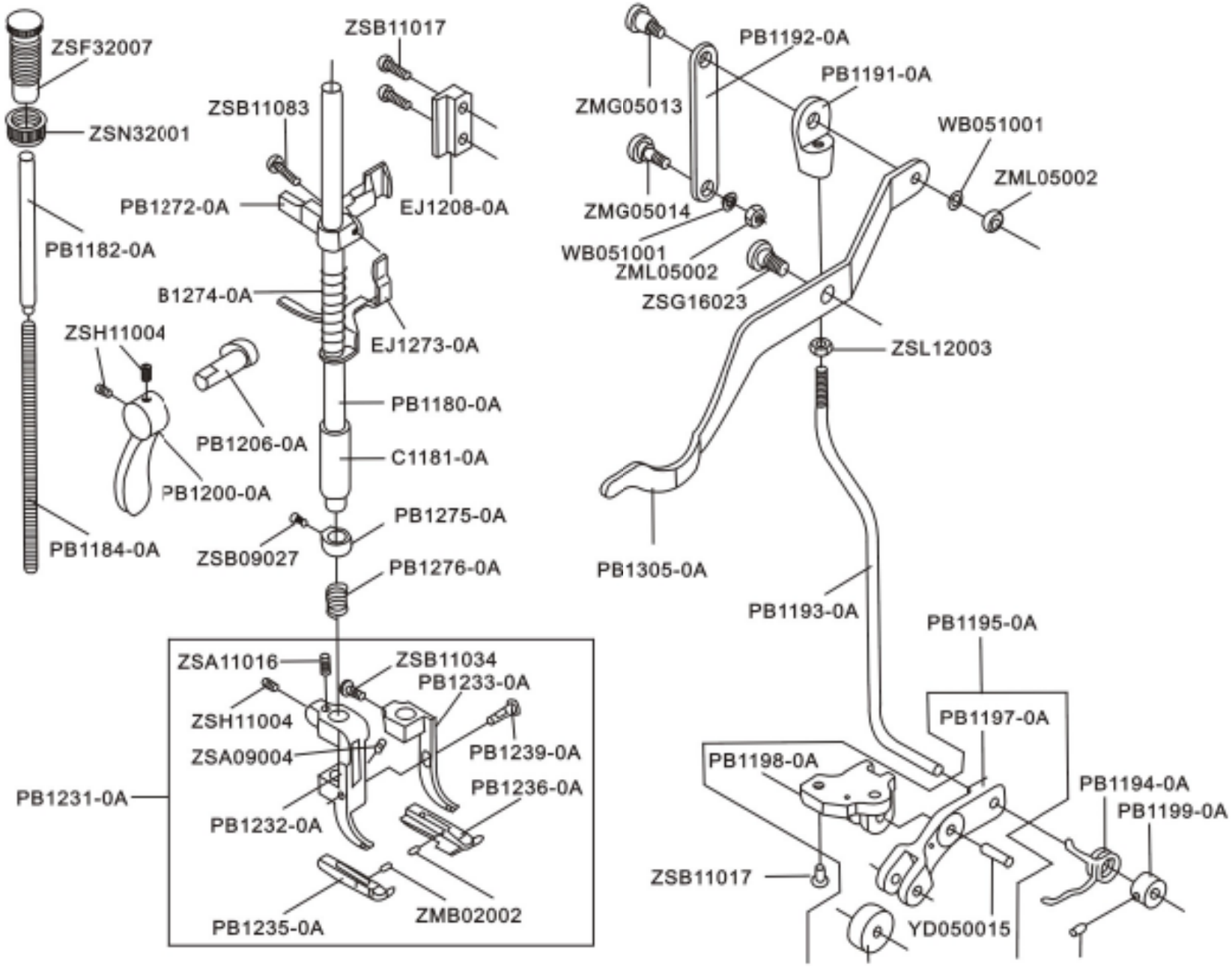

G、1721 押棒機構 PRESSER FOOT MECHANISM

零件號碼 Part No	零件名稱	Name Of Part	件數 Q, TY	備注 Remarks
B1274-0A	彈簧	Spring	1	
C1181-0A	押棒套管	Presser bar bushing	1	
EJ1208-0A	定位板	Position plate	1	
EJ1273-0A	鬆綫導板	Tension release slide	1	
PB1180-0A	押棒	Presser bar	1	
PB1182-0A	彈簧導棒	Spring guide bar complcte	1	
PB1184-0A	彈簧	Spring	1	
PB1191-0A	提升杆接頭	Knee lifter lever joint	1	
PB1192-0A	押脚提升板	Knee lifter lever plate	1	
PB1193-0A	提升拉杆	Knee lifter connecting rod	1	
PB1194-0A	彈簧	Spring	1	
PB1195-0A	炮臺組	Knee lifter connecting rod finger	1	
PB1196-0A	滾輪	Trundle	1	
PB1197-0A	活動杆	Stitch tongue supporter	1	
PB1198-0A	炮臺座	Stitch tongue supporter	1	
PB1199-0A	定環	Collar	1	
PB1200-0A	押脚提升腕	Presser bar lifter	1	
PB1206-0A	押脚提升腕軸	Presser bar lifter shaft	1	
PB1231-0A	押脚組	Presser foot set	1	
PB1232-0A	押脚(左)	Presser foot shank(left)	1	
PB1233-0A	押脚(右)	Presser foot shank(right)	1	
PB1235-0A	押脚(左)	Presser foot(left)	1	
PB1236-0A	押脚(右)	Presser foot(right)	1	
PB1239-0A	固定銷	Pin	1	
PB1272-0A	押棒提升器	Presser bar lifter	1	
PB1275-0A	定環	Presser bar bracket	1	
PB1276-0A	彈簧	Spring	1	
PB1305-0A	押脚提升杆	Foot lifter lifting lever	1	

C、1721 押棒機構 PRESSER FOOT BAT MECHANISM

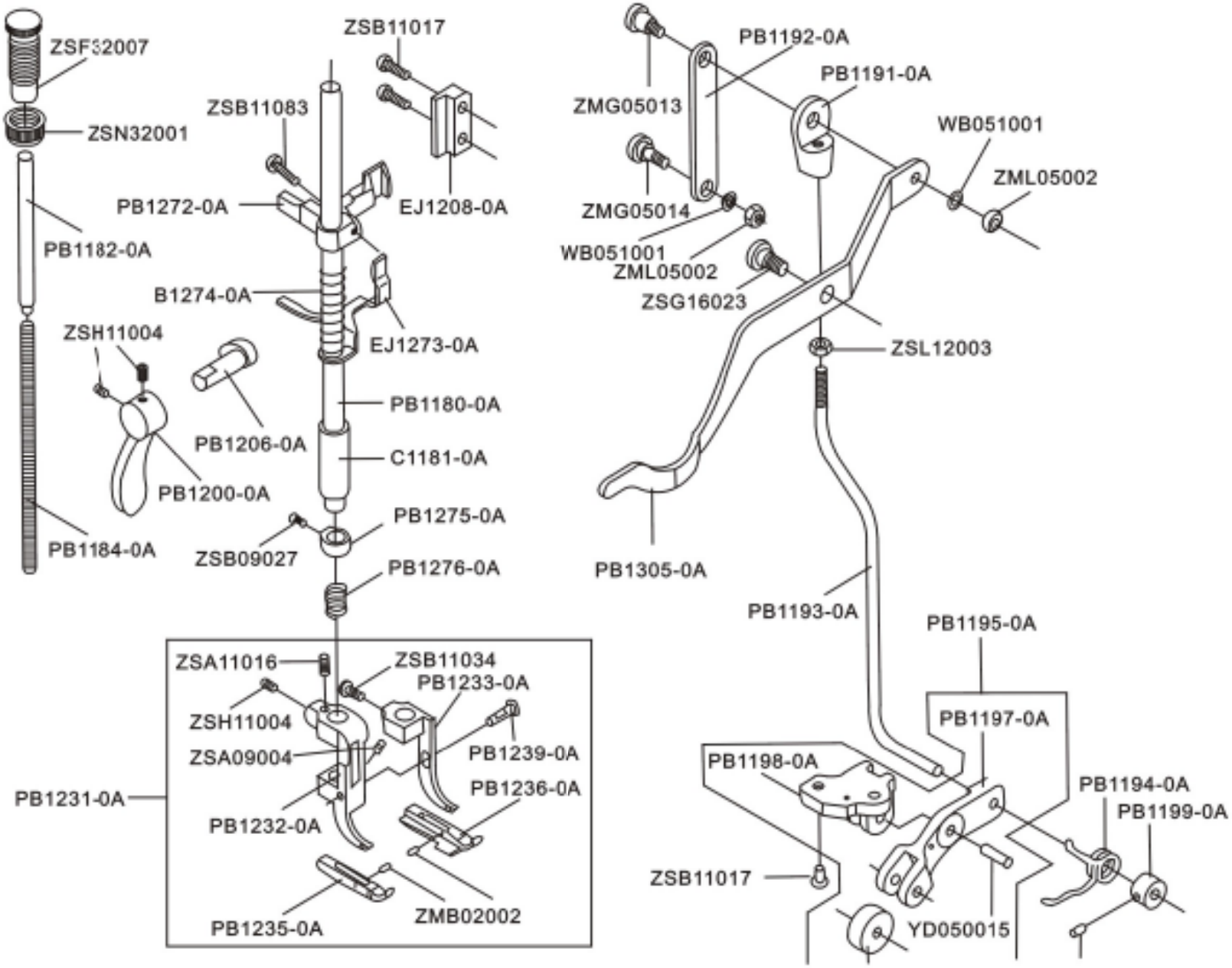

G、1721 押棒機構 PRESSER FOOT MECHANISM

零件號碼 Part No	零件名稱	Name Of Part	件數 Q, TY	備注 Remarks
WB051001	彈簧墊圈	Spring washer	2	
YD050015	彈簧銷	Spring pin	1	
ZMB02002	螺絲	Screw(M2×0.4×2)	2	
ZMG05013	螺絲	Screw(M5×0.8×8)	1	
ZMG05014	螺絲	Screw(M5×0.8×7)	1	
ZML05002	螺母	Nut(M5×0.8×4)	2	
ZSA09004	螺絲	Screw(9/64-40×2.8)	1	
ZSA11016	螺絲	Screw(11/64-40×10)	1	
ZSB09027	螺絲	Screw(9/64-40×4)	1	
ZSB11017	螺絲	Screw(11/64-40×12)	4	
ZSB11034	螺絲	Screw(11/64-40×8)	1	
ZSB11083	螺絲	Screw(11/64-40×18)	1	
ZSF32007	螺絲	Screw(1/2-28×36)	1	
ZSG16023	螺絲	Screw(1/4-24×8)	1	
ZSH11004	螺絲	Screw(11/64-40×5)	4	
ZSL12003	螺絲	Nut(3/16-32×3)	1	
ZSN32001	螺母	Nut(1/2-28×8)	1	

H、1721 送料機構 FEED MECHANISM

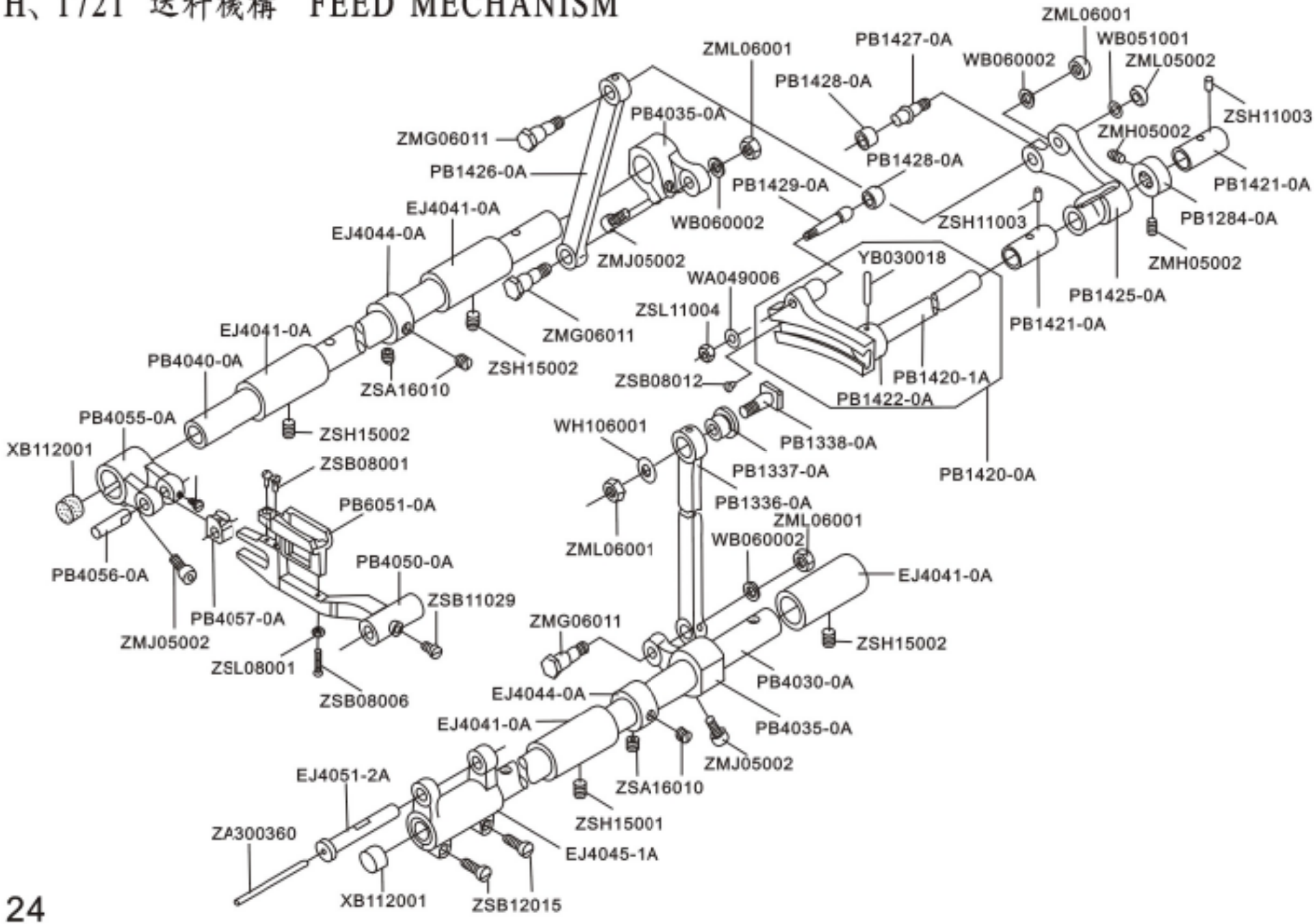

H、1721 送料機構 FEED MECHANISM

零件號碼 Part No	零件名稱	Name Of Part	件數 Q, TY	備注 Remarks
EJ4041-0A	送料軸套管	Feed rock shaft bushing	4	
EJ4044-0A	定環	Collar	2	
EJ4045-1A	送料軸曲柄	Feed rock shaft crank	1	
EJ4051-2A	送料臺軸	Feed bar shaft	1	
PB1284-0A	定環	Collar	1	
PB1336-0A	水平送料連杆	Feed rock crank rod	1	
PB1337-0A	套管	Bushing	1	
PB1338-0A	滑動軸	Feed rock crank rod pin	1	
PB1420-0A	水平送料腕組	Feed rock drive grooved link set	1	
PB1420-1A	水平送料軸	Feed rock shaft	1	
PB1421-0A	水平送料軸套管	Feed rock shaft bushing	2	
PB1422-0A	水平送料腕	Feed rock drive grooved	1	
PB1425-0A	上下送搖動腕	Feed lifting rock vibrating arm	1	
PB1426-0A	上下送連杆	Feed lifting rock crank rod	1	
PB1427-0A	滾輪軸	Roller shaft	1	
PB1428-0A	滾輪	Roller	2	
PB1429-0A	滾輪軸	Roller shaft	1	
PB4030-0A	水平送料軸	Feed rock shaft	1	
PB4035-0A	送料腕	Feed lifting rock shaft crank	2	
PB4040-0A	上下送料軸	Feed rock shaft	1	
PB4050-0A	送料土臺	Feed bar	1	
PB4055-0A	送料腕	Feed lifting rock shaft crank	2	
PB4056-0A	固定杆	Poller shaft	1	
PB4057-0A	滑塊	Square block	1	
PB6051-0A	送料齒	Feed cog	1	

H、1721 送料機構 FEED MECHANISM

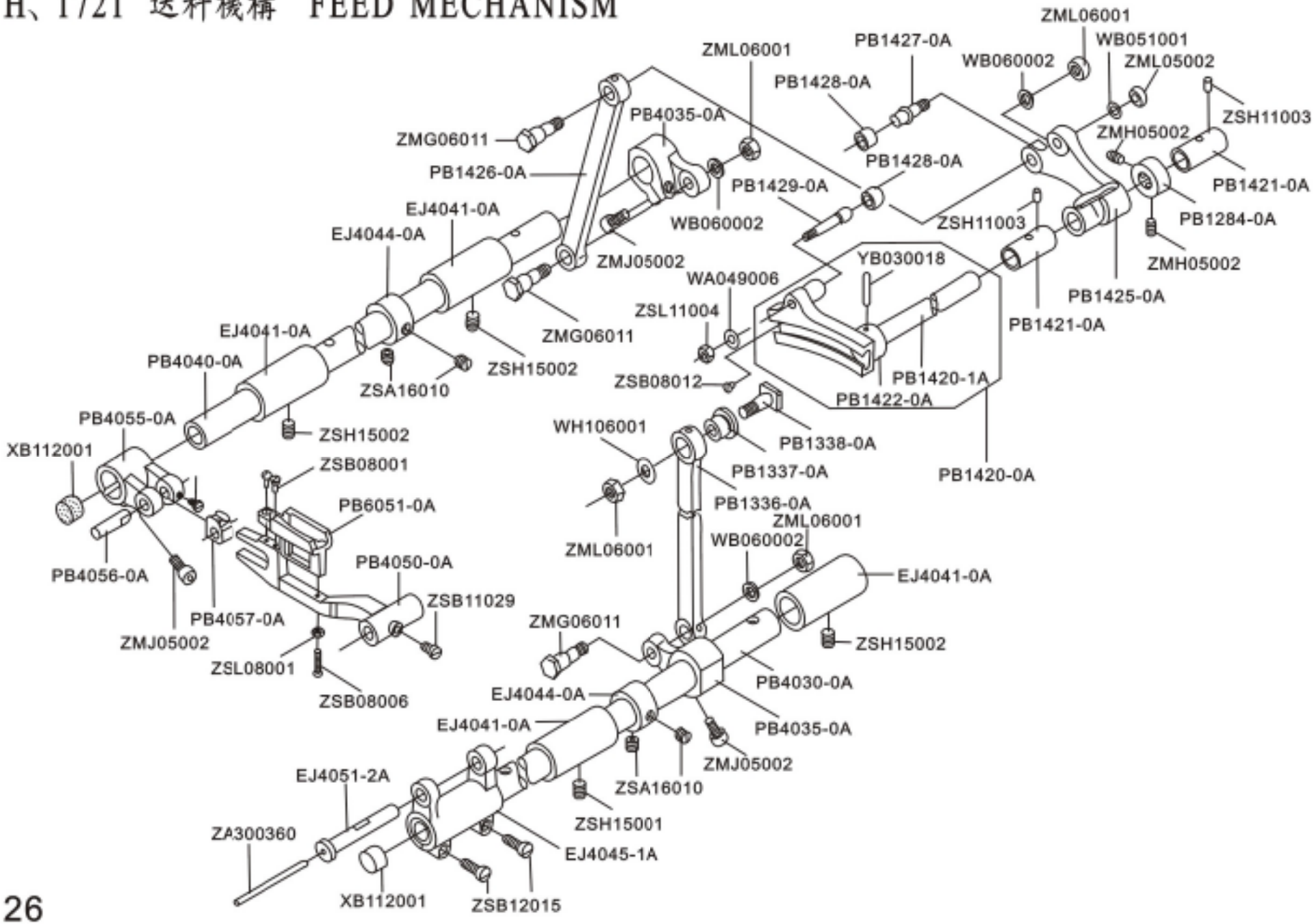

H、1721 送料機構 FEED MECHANISM

零件號碼 Part No	零件名稱	Name Of Part	件數 Q, TY	備注 Remarks
WA049006	平墊圈	Washer	1	
WB051001	彈簧墊圈	Spring washer	1	
WB060002	彈簧墊圈	Spring washer	3	
WH106001	平墊圈	Washer	1	
XA300360	油綫	Oil wick	1	
XB112001	油棉	Oil felt	2	
YB030018	推拔銷	Taper pin	1	
ZMG06011	螺絲	Screw(M6×1.0×6.5)	3	
ZMH05002	螺絲	Screw(M5×0.8×6)	2	
ZMJ05002	螺絲	Screw(M5×0.8×12)	3	
ZML05002	螺母	Nut(M5×0.8×4)	1	
ZML06001	螺母	Nut(M6×1.0×4.8)	4	
ZSA16010	螺絲	Screw(1/4-40×4.5)	4	
ZSB08001	螺絲	Screw(1/8-44×6)	2	
ZSB08006	螺絲	Screw(1/8-44×12)	1	
ZSB08012	螺絲	Screw(1/8-44×3.5)	1	
ZSB09026	螺絲	Screw(9/64-40×5)	1	
ZSB11029	螺絲	Screw(11/64-40×7)	1	
ZSB12015	螺絲	Screw(3/16-28×12)	2	
ZSH11003	螺絲	Screw(11/64-40×8.5)	2	
ZSH15001	螺絲	Screw(15/64-28×6)	1	
ZSH15002	螺絲	Screw(15/64-28×8)	3	
ZSL08001	螺母	Nut(1/8-44×2)	1	
ZSL11004	螺母	Nut(11/64-40×3)	1	

I、1721 下軸、釜軸機構 LOWER SHAFT AND ROTARY HOOK MECHANISM

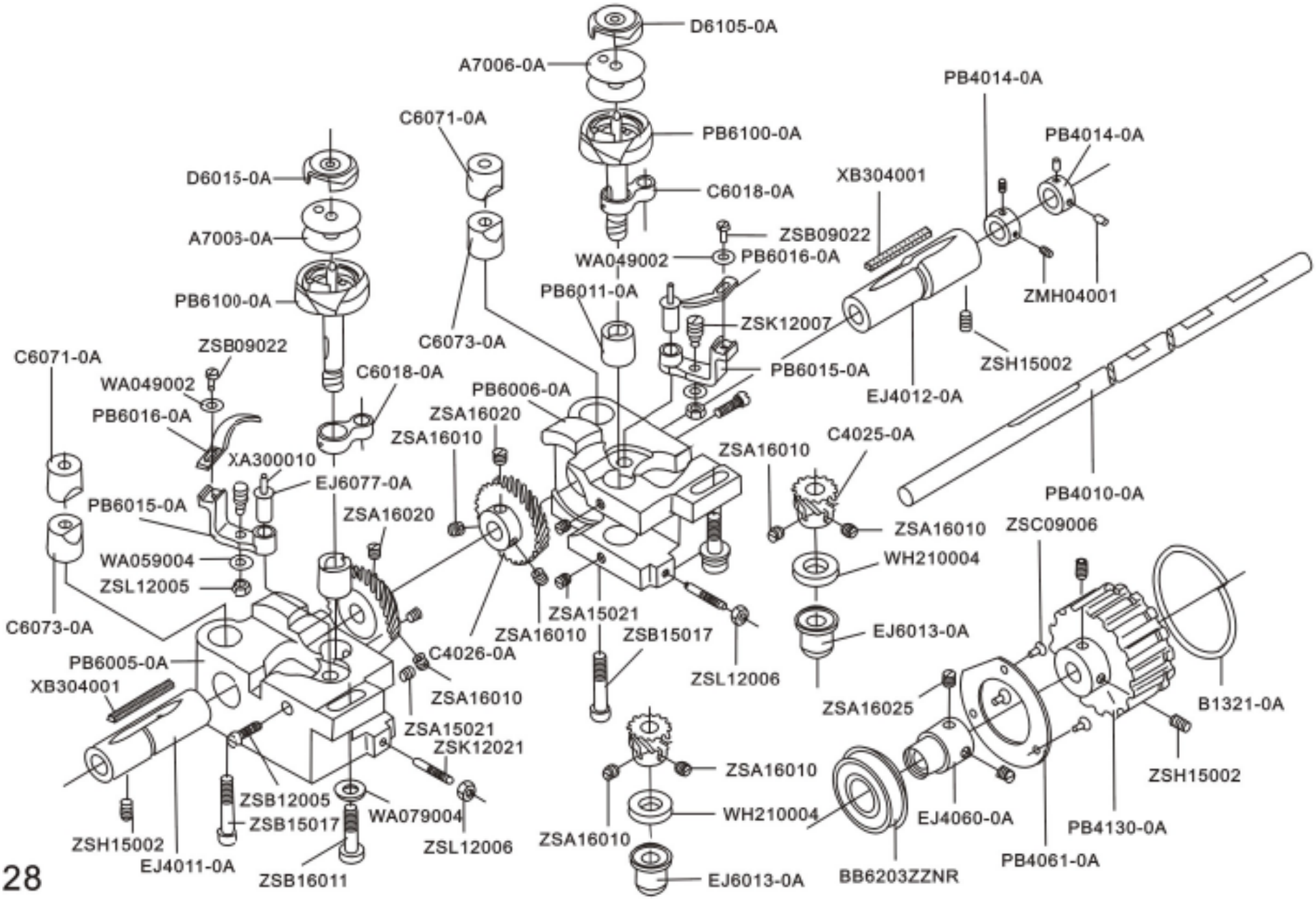

I、1721 下軸、釜軸機構 LOWER SHAFT AND ROTARY HOOK MECHANISM

零件號碼 Part No	零件名稱	Name Of Part	件數 Q, TY	備注 Remarks
A7006-0A	梭心	Bobbin	2	
B1321-0A	齒輪邊環	Side ring	1	
BB6203ZZNR	滾珠軸承	Ball bearing	1	
C4025-0A	斜齒輪(小)	Pinion	2	
C4026-0A	斜齒輪(大)	Spiral gear	2	
C6018-0A	釜軸連結器	Opener link	2	
C6071-0A	束緊套管(上)	Pinch sleeve (upper)	2	
C6073-0A	束緊套管(下)	Pinch sleeve (lower)	2	
D6105-0A	旋梭外殼	Bobbin case complete	2	
EJ4011-0A	下軸套管(左)	Lower shaft bushing(left)	1	
EJ4012-0A	下軸套管(右)	Lower shaft bushing(right)	1	
EJ4060-0A	下軸軸承套管	Bearing holder	1	
EJ6013-0A	釜軸套管(下)	Rotary hook shaft hushing (lower)	2	
EJ6077-0A	牛角曲柄座杆	Qpener crank stud	2	
PB4010-0A	下軸	Lower shaft	1	
PB4014-0A	定環	Collar	2	
PB4061-0A	軸承蓋	Bearing presser	1	
PB4130-0A	齒形皮帶輪	Timing belt wheel	1	
PB6005-0A	釜座(左)	Rotary hook base(left)	1	
PB6006-0A	釜座(右)	Rotary hook base(right)	1	
PB6011-0A	釜軸套管(上)	Rotary hook shaft bushing(upper)	2	
PB6015-0A	牛角座	Opener crank	2	
PB6016-0A	牛角	Bobbin case opener	2	
PB6100-0A	梭頭(大釜)	Rotary hook assembly	2	

A、1721 本體機構 ARM BED AND IT'S ACCESSORIES

零件號碼 Part No	零件名稱	Name Of Part	件數 Q, TY	備注 Remarks
C1041-0A	吊綫固定板	Stopper	1	
EJ1051-0A	綫挂	Top cover thrcad guide	1	
PA1013-4A	油塞	Oil cap	1	
PA1013-5A	油塞	Oil cap	1	
PB1010-0A	面板	Face plate	1	
PB1012-0A	後防塵蓋	Protecting cover	1	
PB1052-0A	綫挂	Thread guide wire	1	
PB1053-0A	綫挂	Thread guide wire	1	
PB1063-0A	天秤蓋	Thread take-up cover	1	
PB1132-0A	油槽蓋	Cover Plate	1	
PB1133-0A	油槽	Oil tank	1	
PB1348-0A	擋板	Protecting cover	1	
PB4080-0A	角板(左)	Slide plate(left)	1	
PB4081-0A	角板(右)	Slide plate(right)	1	
PB6050-0A	針板	Needle plate	1	
PB6056-0A	護針塊	Protecting needle slide	1	
WA049001	平墊圈	Washer	3	
WA059003	平墊圈	Washer	2	
XB216001	油棉	Felt	1	
YA020080	平行銷	Pin	1	
ZMJ05008	螺絲	Screw(M5×0.8×10)	2	
ZSB09011	螺絲	Screw(9/64-40×6.5)	3	
ZSB09020	螺絲	Screw(9/64-40×6)	1	
ZSB09033	螺絲	Screw(9/64-40×4)	1	
ZSB11012	螺絲	Screw(11/64-40×8)	1	
ZSB11022	螺絲	Screw(11/64-40×7)	2	
ZSC06003	螺絲	Screw(3/32-56×3)	2	
ZSC09011	螺絲	Screw(9/64-40×4.5)	2	
ZSC09012	螺絲	Screw(9/64-40×7)	2	
ZSC11004	螺絲	Screw(11/64-40×8)	1	
ZSF09003	螺絲	Screw(9/64-40×8)	1	
ZSQ09005	螺絲	Screw(9/64-40×4)	1	

I、1721 下軸、釜軸機構 LOWER SHAFT AND ROTARY HOOK MECHANISM

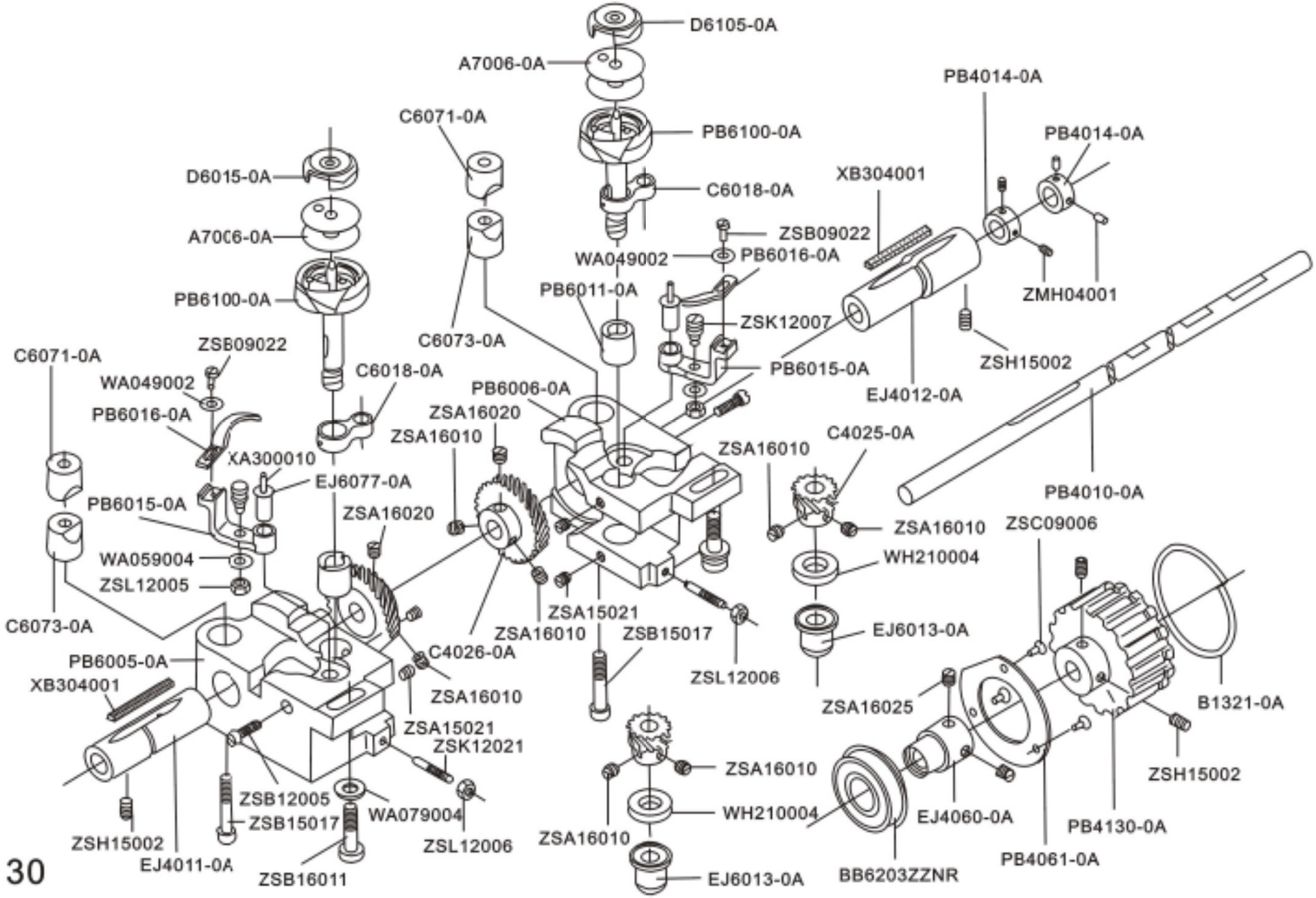

零件號碼 Part No	零件名稱	Name Of Part	件數 Q, TY	備注 Remarks
WA049002	平墊圈	Washer	2	
WA059004	平墊圈	Washer	2	
WA079004	平墊圈	Washer	2	
WH210004	平墊圈	Washer	2	
XA300010	油綫	Oil wick	2	
XB304001	油棉	Oil felt	2	
ZMH04001	螺絲	Screw(M4×0.7×4)	4	
ZSA15021	螺絲	Screw(15/64-28×4.5)	4	
ZSA16010	螺絲	Screw(1/4-40×4.5)	8	
ZSA16020	螺絲	Screw(1/4-40×5.5)	2	
ZSA16025	螺絲	Screw(1/4-40×6)	2	
ZSB09022	螺絲	Screw(9/64-40×8)	2	
ZSB12005	螺絲	Screw(3/16-28×15)	2	
ZSB15017	螺絲	Screw(15/64-28×31.4)	2	
ZSB16011	螺絲	Screw(1/4-24×25)	2	
ZSC09006	螺絲	Screw(9/64-40×8)	3	
ZSH15002	螺絲	Screw(15-64-28×8)	4	
ZSK12007	螺絲	Screw	2	
ZSK12021	螺絲	Screw	2	
ZSL12005	螺母	Nut(3/16-32×3.5)	2	
ZSL12006	螺母	Nut(3/16-32×3)	2	

J、1721 附件 ACCESSORIES

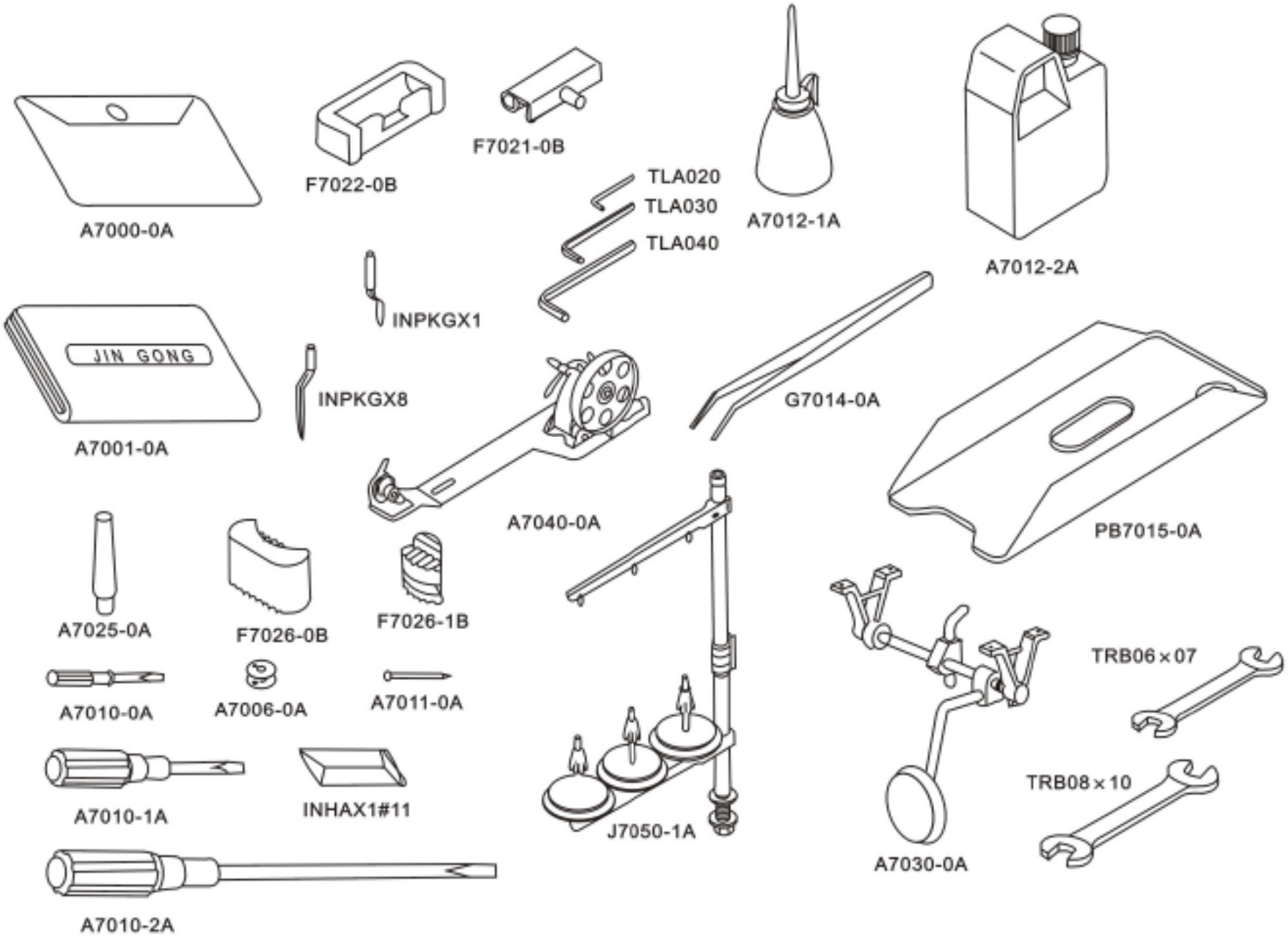

J、1721 附件 ACCESSORIES

零件號碼 Part No	零件名稱	Name Of Part	件數 Q, TY	備注 Remarks
A7000-0A	工具袋	Accessory bag	1	
A7001-0A	車頭蓋	Vinyl cover	1	
A7006-0A	梭心	Bobbin	4	
A7010-0A	螺絲起子(小)	Screw driver(small)	1	
A7010-1A	螺絲起子(中)	Screw driver (middle)	1	
A7010-2A	螺絲起子(大)	Screw driver (large)	10	
A7011-0A	鐵釘	Nail	1	
A7012-1A	油壺	Oiler	1	
A7012-2A	油壺	Oiler	1	
A7025-0A	枕木	Head rest wood	1	
A7030-0A	脚弓組	Knee lifter assy	1	
A7040-0A	卷綫器	Bobbin winder	1	
F7021-0B	後鈕扣	Head hinge	2	
F7022-0B	後鈕座	Rubber hinge	2	
F7026-0B	橡膠墊	Head cushion	2	
F7026-1B	橡膠墊座	Head cushion	2	
G7014-0A	夾子	Tweezers	1	
INHAX1#11	針	Needle	10	
INPKGX8	案內針	Guide needle (piercer)	1	
INPKZX1	親針	Main needle (auxiliary picrcer)	1	
J7050-1A	綫架	Thread stand	1	
PB7015-0A	下油槽	Oil pan	1	
TLA020	L形六角板手	Wrench 2mm	1	
TLA030	L形六角板手	Wrench 3mm	1	
TLA040	L形六角板手	Wrench 4mm	1	
TRB06×07	開口板手	Spanner 6×7	1	
TRB08×10	開口板手	Spanner 8×10	1	

K、1721 零件號碼與頁數封照 NUMERICAL PARTS-LIST

零件號碼 PART NO	頁數 PAGE	零件號碼 PART NO	頁數 PAGE	零件號碼 PART NO	頁數 PAGE	零件號碼 PART NO	頁數 PAGE
A1021-1A	4	A7030-0A	32	EJ4044-0A	24	PB1074-0A	8
A1024-1A	4	A7040-0A	32	EJ4045-1A	24	PB1076-0A	8
A1026-1A	4	B1274-0A	20	EJ4051-2A	24	PB1080-0A	8
A1026-2A	4	B1321-0A	6,28	EJ4060-0A	28	PB1081-0A	8
A1027-1A	4	BB6203ZZNR	28	EJ6013-0A	28	PB1100-0A	6
A1028-1A	4	BB6204ZZNR	6	EJ6077-0A	28	PB1108-0A	6
A1028-2A	4	C1041-0A	2	F7021-0B	32	PB1109-0A	16
A1030-0A	4	C1062-1A	8	F7022-0B	32	PB1132-0A	2
A1031-0A	4	C1082-0A	8	F7026-0B	32	PB1133-0A	2
A1032-0A	4	C1181-0A	20	F7026-1B	32	PB1180-0A	20
A1033-0A	4	C4025-0A	28	G7014-0A	32	PB1182-0A	20
A1034-0A	4	C4026-0A	28	INHAX1#11	8,32	PB1184-0A	20
A1035-0A	4	C6018-0A	28	INPKGX8	8,32	PB1191-0A	20
A1036-0A	4	C6071-0A	28	INPKZX1	16,32	PB1192-0A	20
A1037-0A	4	C6073-0A	28	J7050-1A	32	PB1193-0A	20
A1038-0A	4	D6105-0A	28	PA1013-0A	8	PB1194-0A	20
A1061-0A	8	EG1105-0A	6	PA1013-4A	2	PB1195-0A	20
A1107-0A	8	EJ1051-0A	2	PA1013-5A	2	PB1196-0A	20
A7000-0A	32	EJ1101-0A	6	PB1010-0A	2	PB1197-0A	20
A7001-0A	32	EJ1103-0A	6	PB1012-0A	2	PB1198-0A	20
A7006-0A	28,32	EJ1106-0A	6	PB1020-0A	4	PB1199-0A	20
A7010-0A	32	EJ1208-0A	20	PB1043-0A	4	PB1200-0A	20
A7010-1A	32	EJ1273-0A	20	PB1052-0A	2	PB1206-0A	20
A7010-2A	32	EJ1320-0A	6	PB1053-0A	2	PB1231-0A	20
A7011-0A	32	EJ1322-0A	6	PB1063-0A	2	PB1232-0A	20
A7012-1A	32	EJ4011-0A	28	PB1070-0A	8	PB1233-0A	20
A7012-2A	32	EJ4012-0A	28	PB1071-0A	8	PB1235-0A	20
A7025-0A	32	EJ4041-0A	24	PB1073-0A	8	PB1236-0A	20

K、1721 零件號碼與頁數封照 NUMERICAL PARTS-LIST

零件號碼 PART NO	頁數 PAGE	零件號碼 PART NO	頁數 PAGE	零件號碼 PART NO	頁數 PAGE	零件號碼 PART NO	頁數 PAGE
PB1239-0A	20	PB1335-0A	12	PB1422-0A	24	PB4055-0A	24
PB1272-0A	20	PB1336-0A	24	PB1425-0A	24	PB4056-0A	24
PB1275-0A	20	PB1337-0A	24	PB1426-0A	24	PB4057-0A	24
PB1276-0A	20	PB1338-0A	24	PB1427-0A	24	PB4061-0A	28
PB1280-0A	14	PB1340-0A	12	PB1428-0A	24	PB4080-0A	2
PB1280-1A	14	PB1340-1A	12	PB1429-0A	24	PB4081-0A	2
PB1283-0A	14	PB1341-0A	12	PB1470-0A	16	PB4130-0A	28
PB1284-0A	14,16,24	PB1342-0A	12	PB1471-0A	16	PB6005-0A	28
PB1285-0A	14	PB1343-0A	12	PB1473-0A	16	PB6006-0A	28
PB1286-0A	14	PB1345-0A	12	PB1475-0A	16	PB6011-0A	28
PB1287-0A	14	PB1346-0A	12	PB1476-0A	16	PB6015-0A	28
PB1288-0A	14	PB1348-0A	2	PB1477-0A	16	PB6016-0A	28
PB1289-0A	14,16	PB1351-0A	12	PB1478-0A	16	PB6050-0A	2
PB1290-0A	16	PB1352-0A	12	PB1478-1A	16	PB6051-0A	24
PB1290-1A	16	PB1353-0A	12,14	PB1479-0A	16	PB6056-0A	2
PB1295-0A	16	PB1356-0A	12	PB1661-0A	8	PB6100-0A	28
PB1297-0A	16	PB1357-0A	12	PB1662-0A	8	PB7015-0A	32
PB1298-0A	6	PB1358-0A	12	PB1663-0A	8	RE000060	14
PB1305-0A	20	PB1410-0A	16	PB1665-0A	8	TLA020	32
PB1313-0A	14	PB1411-0A	16	PB1666-0A	8	TLA030	32
PB1314-0A	14	PB1412-0A	16	PB1671-0A	8	TLA040	32
PB1317-0A	14	PB1413-0A	16	PB1672-0A	8	TRB06×07	32
PB1317-1A	14	PB1415-0A	16	PB4010-0A	28	TRB08×10	32
PB1318-0A	14	PB1416-0A	16	PB4014-0A	28	WA030003	10
PB1319-0A	14	PB1418-0A	16	PB4030-0A	24	WA030004	10
PB1330-0A	12	PB1420-0A	24	PB4035-0A	24	WA049001	2
PB1331-0A	12	PB1420-1A	24	PB4040-0A	24	WA049002	30
PB1332-0A	12	PB1421-0A	16,24	PB4050-0A	24	WA049003	14

K、1721 零件號碼與頁數封照 NUMERICAL PARTS-LIST

零件號碼 PART NO	頁數 PAGE	零件號碼 PART NO	頁數 PAGE	零件號碼 PART NO	頁數 PAGE	零件號碼 PART NO	頁數 PAGE
WA049006	26	YD050015	22	ZSB09011	2	ZSC09011	2
WA059003	2	ZMB02002	22	ZSB09016	12,14	ZSC09012	2
WA059004	30	ZMG05013	22	ZSB09017	18	ZSC11004	2
WA079004	30	ZMG05014	22	ZSB09020	2	ZSF09003	2
WB031001	10	ZMG06011	18,26	ZSB09022	10,30	ZSF32007	22
WB051001	18,22,26	ZMH04001	30	ZSB09026	10,18,26	ZSG09004	4
WB060002	18,26	ZMH05001	14	ZSB09027	18,22	ZSG09005	4
WH106001	26	ZMH05002	18,26	ZSB09033	2	ZSG09022	14
WH209001	14	ZMJ05002	14,26	ZSB11003	12	ZSG16023	22
WH210004	30	ZMJ05003	18	ZSB11012	2	ZSH11002	18
WH212003	18	ZMJ05008	2	ZSB11014	10	ZSH11003	10,18,26
XA300010	30	ZML05002	18,22,26	ZSB11017	14,22	ZSH11004	14,22
XA300065	10	ZML06001	26	ZSB11022	2,4	ZSH15001	26
XA300210	12	ZML06004	18	ZSB11029	26	ZSH15002	4,6,12
XA300360	26	ZSA09004	22	ZSB11034	22	ZSH15002	18,26,30
Xa500040	10	ZSA11016	22	ZSB11083	22	ZSH15003	18
XB112001	26	ZSA15021	30	ZSB12005	30	ZSH15004	10
XB118001	6	ZSA16009	6	ZSB12015	26	ZSH15005	18
XB205002	18	ZSA16010	6,26,30	ZSB15006	6	ZSH16001	6
XB216001	2	ZSA16020	30	ZSB15017	30	ZSK12007	30
XB304001	30	ZSA16025	30	ZSB15025	6	ZSK12021	30
Y1060-4A	8	ZSA16029	6	ZSB15041	6	ZSL08001	10,26
YA020080	2	ZSB06003	4	ZSB16011	30	ZSL09001	4
YA020150	4	ZSB08001	26	ZSB18001	6	ZSL09002	10
YA025150	4	ZSB08006	26	ZSB18002	6	ZSL11004	26
YB020012	12	ZSB08010	10	ZSB22001	6	ZSL12003	22
YB030018	26	ZSB08012	26	ZSC06003	2	ZSL12005	30
YB030020	14,18	ZSB08030	10	ZSC09006	30	ZSL12006	30

B、1721 縫綫壓力調整機構 UPPER THREAD TENSION REGULATOR MECHANISM

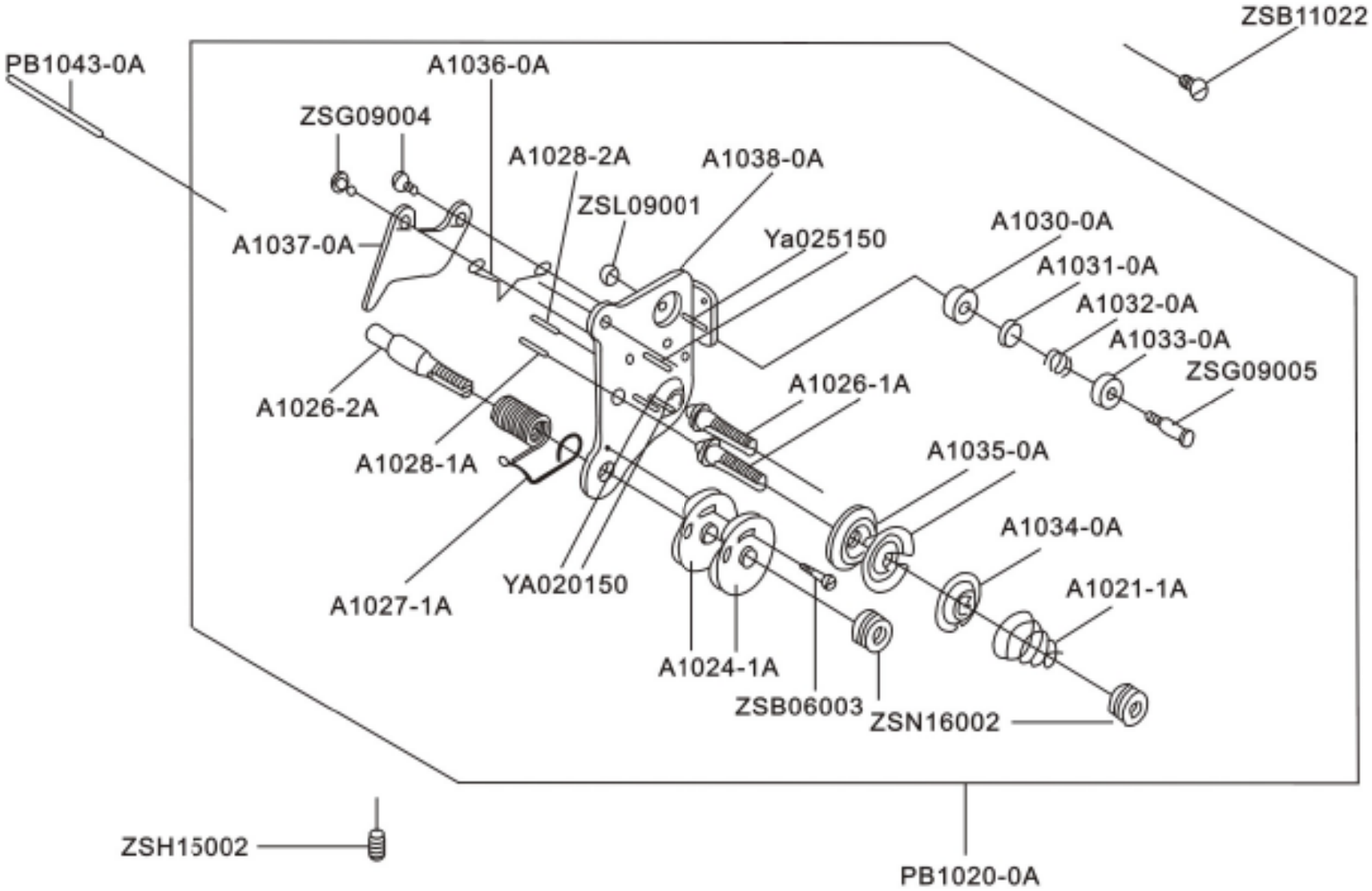

B、1721 縫綫壓力調整機構 UPPER THREAD TENSION REGULATOR MECHANISM

零件號碼 Part No	零件名稱	Name Of Part	件數 Q, TY	備注 Remarks
A1021-1A	調整彈簧	Thread tcnsion spring	2	
A1024-1A	過綫盤組	Tension regulator bracket	2	
A1026-1A	調整螺絲棒	Thread tcnsion stud	2	
A1026-2A	調整螺絲棒	Thread tcnsion stud	1	
A1027-1A	吊綫彈簧	Thread take-up spring	1	
A1028-1A	鬆綫銷	Tension releasion pin	1	
A1028-2A	鬆綫銷	Tension releasion pin	1	
A1030-0A	過綫孔臺	Thread guide disk	1	
A1031-0A	過綫孔盤	Thread guide disk	1	
A1032-0A	導綫架彈簧	Spring	1	
A1033-0A	過綫孔內蓋	Thread guide bracket	1	
A1034-0A	綫調整壓盤	Tension regulator presser disc	2	
A1035-0A	壓綫盤	Tension disc	4	
A1036-0A	壓板彈簧	Tension regulator spring	1	
A1037-0A	彈簧板	Tension releasion plate	1	
A1038-0A	上綫壓力板	Upper thread tension plate	1	
PB1020-0A	上綫壓力板組	Thread tension reguiator assy	1	
PB1043-0A	鬆綫銷	Tension relesion pin	1	
YA020150	平行銷	Pin	2	
YA025150	平行銷	Pin	2	
ZSB06003	螺絲	Screw(3/32-56×12)	1	
ZSB11022	螺絲	Screw(11/64-40×7)	1	
ZSG09004	螺絲	Screw(9/64-40×2.5)	2	
ZSG09005	螺絲	Screw(9/64-40×7)	1	
ZSH15002	螺絲	Screw(15/64-28×8)	1	
ZSL09001	螺母	Nut(9/64-40×3)	1	
ZSN16002	螺母	Nut(1/4-40×12)	3	

C、1721 上軸機構 UPPER SHAFT MECHANISM

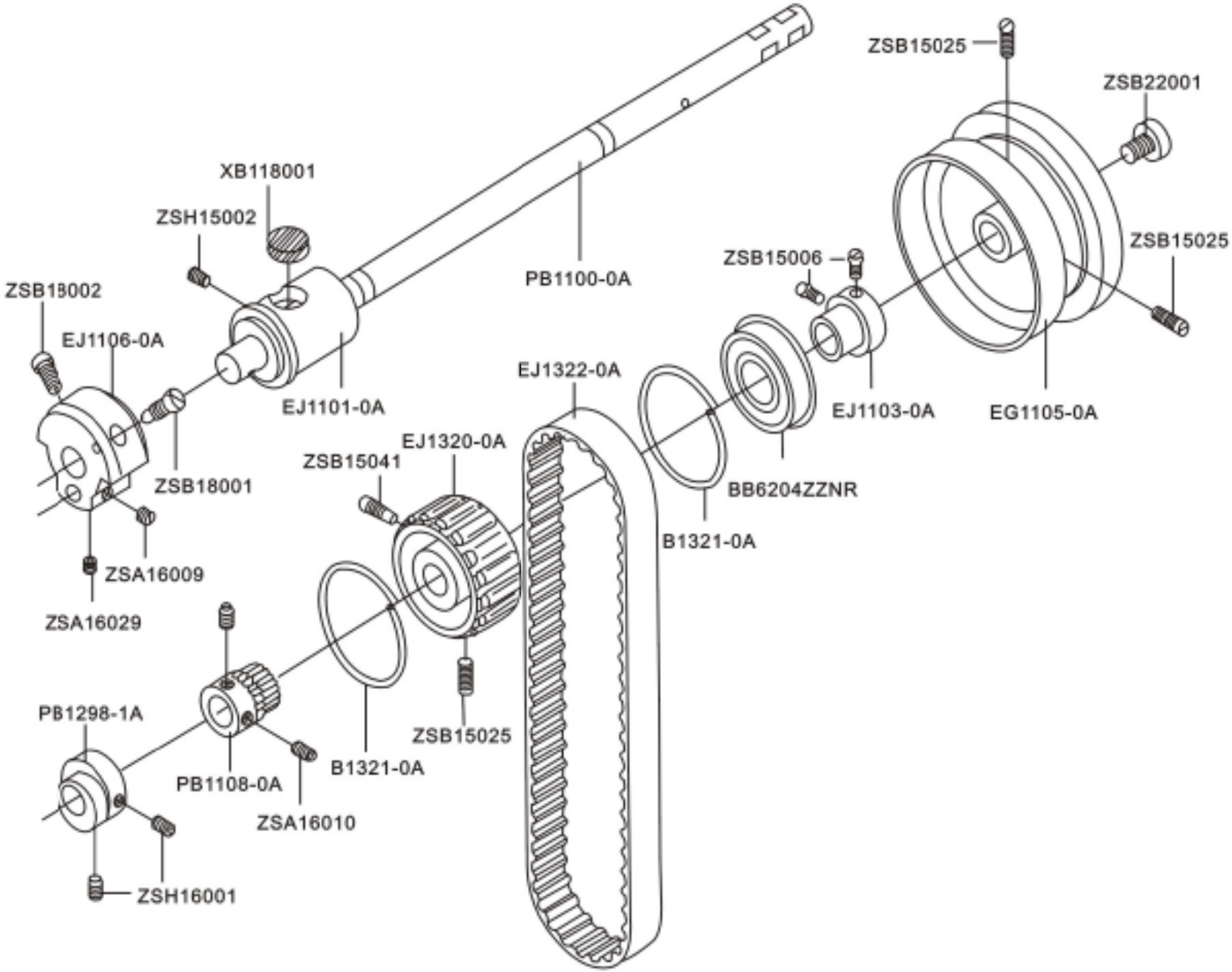

C、1721 上軸機構 UPPER SHAFT MECHANISM

零件號碼 Part No	零件名稱	Name Of Part	件數 Q, TY	備注 Remarks
B1321-0A	齒輪邊環	Spring flange	2	
BB6204ZZNR	滾珠軸承	Ball bearing	1	
EG1105-0A	皮帶輪	Pulley	1	
EJ1101-0A	上軸套管	Upper shaft bushing	1	
EJ1103-0A	上軸套管	Upper shaft bushing	1	
EJ1106-0A	凸輪	Crank cam	1	
EJ1320-0A	齒形皮帶輪	Belt sprocket	1	
EJ1322-0A	齒形皮帶	Timing belt	1	
PB1100-0A	上軸	Uppeer shaft	1	
PB1108-0A	上軸平齒輪	Gear	1	
PB1298-1A	偏心輪	Eccentric	1	
XB118001	油棉	Felt	1	
ZSA16009	螺絲	Screw(1/4-40×7)	1	
ZSA16010	螺絲	Screw(1/4-40×4.5)	2	
ZSA16029	螺絲	Screw(1/4-40×3.5)	1	
ZSB15006	螺絲	Screw(15/64-28×8.5)	2	
ZSB15025	螺絲	Screw(15/64-28×12)	3	
ZSB15041	螺絲	Screw(15/64-28×9)	1	
ZSB18001	螺絲	Screw(9/32-28×16)	1	
ZSB18002	螺絲	Screw(9/32-28×13)	1	
ZSB22001	螺絲	Screw(11/32-28×13)	1	
ZSH15002	螺絲	Screw(15/64-28×8)	1	
ZSH16001	螺絲	Screw(1/4-40×6)	2	

D、1721 針棒、天秤機構 NEEDLE BAR AND TAKE-UP LEVER MECHANISM

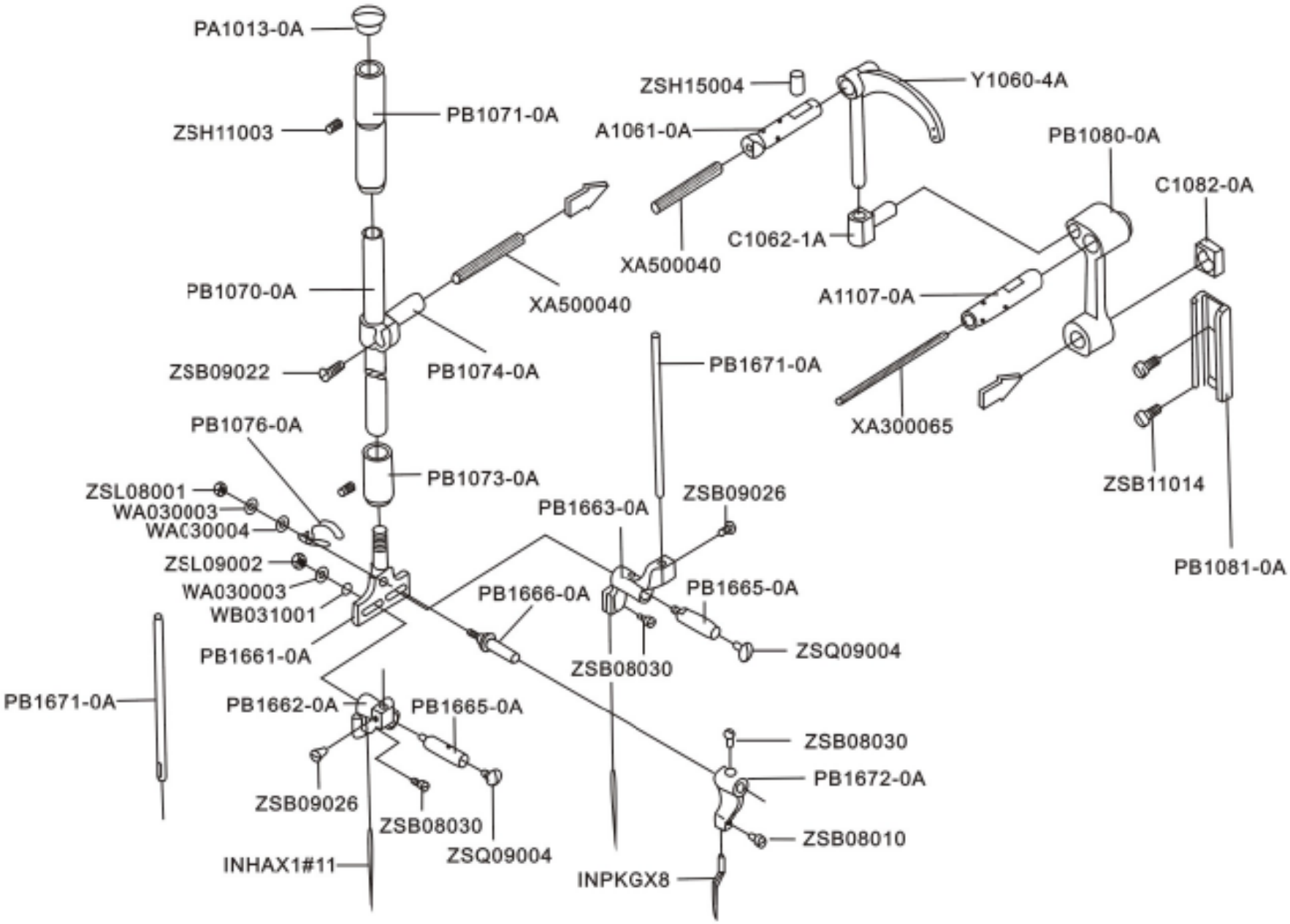

D、1721 針棒、天秤機構 NEEDLE BAR AND TAKE-UP LEVER MECHANISM

零件號碼 Part No	零件名稱	Name Of Part	件數 Q, TY	備注 Remarks
A1061-0A	天秤固定銷	Take-up lever support stud	1	
A1107-0A	凸輪固定銷	Needle bar crank pin	1	
C1062-1A	天秤滑塊	Needle bar conncting link	1	
C1082-0A	針棒滑塊	Needle bar guide slide dlock	1	
INHAX1#11	針	Needle	2	
INPKGX8	案內針	Guide needle(pierccr)	1	
PA1013-0A	油塞	Needle bar upper bushing cap	1	
PB1070-0A	針棒	Needle bar	1	
PB1071-0A	針棒套管(上)	Needle bar bushing(upper)	1	
PB1073-0A	針棒套管(下)	Needle bar bushing(lower)	1	
PB1074-0A	針棒鉗	Needle bar connecting stud	1	
PB1076-0A	針棒綫挂	Needle bar thread guide	1	
PB1080-0A	針棒連結器	Needle bar connecting crank rod	1	
PB1081-0A	針杆導板	Needle bar connecting link plate	1	
PB1661-0A	定位針座	Needle al locate block	1	
PB1662-0A	針榴(左)	Needle clamp(left)	.1	
PB1663-0A	針榴(右)	Needle clamp(right)	1	
PB1665-0A	針榴支軸	Needle clamp shaft	2	
PB1666-0A	定位針座軸	Guide needle supporting shaft	1	
PB1671-0A	縱定位棒	Vertical guide shaft	2	
PB1672-0A	定位針座	Guide needle clamp	1	
Y1060-4A	天秤	Thread take-up	1	